SRP3

DIAPHRAGM PUMP FOR AIR/GAS APPLICATION



Attributes	Applications
100% Oil-free	Aspiration (surgical, welding)
Excellent gas sealing / Contamination free	Small portable equipment
Optimal flow to size ratio	Environmental sampling
Low power consumption and noise level	Laboratory analysis
Quick and easy maintenance procedure	Laser cutters
Pump Re-Start at max levels	Pick and place, transport
Possibility to handle separate gases per head	Vacuum-therapy

Performance Data (single head)

Maximum Flow	8 l/min
Maximum Vacuum	-813 mbar
Maximum Pressure	1300 mbar [1]
Maximum vacuum Start up	-813 mbar
Maximum pressure Start up	1300 mbar

[1] Available under request for maximum pressure up to 2000 mbar

Motor Data

Motor Type	DC Brushed	
Voltage	12 Vdc	24 Vdc
Maximum current	3.00 A	1.30 A
IP	50	
Insulation Class	E	
Electrical Connection	2 wire length 290 mm	

Additional Data

Average Noise	57 dB
Weight	724 g

Dimensions in mm

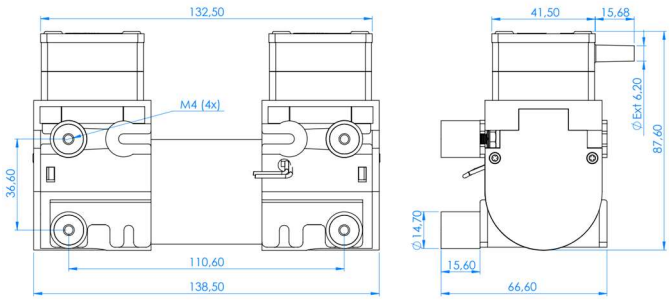

Available Material Options

Head	PPS (alternatives on request)
Diaphragm	FKM (alternatives on request)
Valve	FKM (alternatives on request)
O-Ring	VMQ (alternatives on request)

Service kits

RUBBER KIT H/S5 M/SR P&N [2]	900.12

[2] (single head)

Vacuum / Flow characteristic

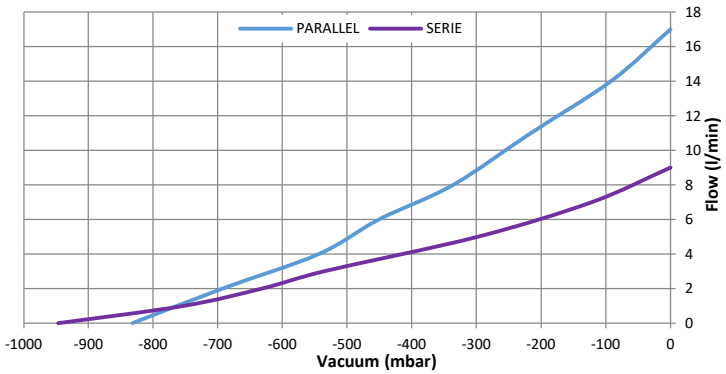

Pressure / Flow characteristic

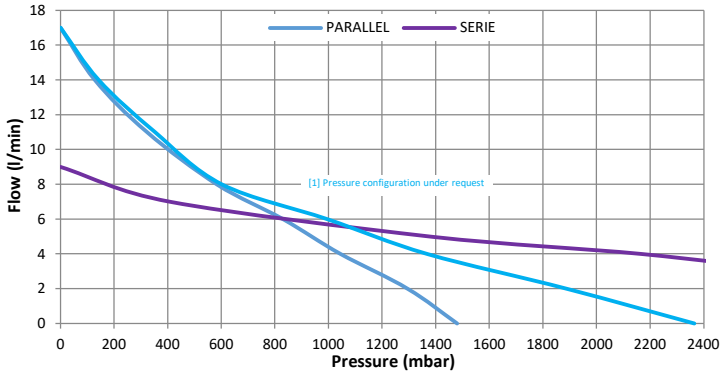

HEADQUARTERS
Castellví de Rosanes factories 1 & 2
La Pedrosa Industrial Park
08783 Masquefa; Barcelona; Spain
Tel: +34 937 728 529
Fax: +35 937 728 591
Email: comercial@electroad.es

ITALY SALES OFFICE
Via Giacomo Manzù 25
24122 Bergamo; Italy
Tel: +39 389 445 8471
Tel: +39 320 225 0058
Email: fdonado@ead-pumps.com
Email: sdeleonardis@ead-pumps.com

Your **success** is our satisfaction

Solutions for a **smart world**

Electro A.D., S.L. as a manufacturer does not guarantee or assume any obligation related to the data contained on this document and remarks that it could slightly differ between different products.
Electro A.D., S.L. keeps the right to modify any part or group of parts manufactured without notice in order to improve the product.
SRP3 Gas Datasheet rev.0 – All rights reserved.