SR10 BD

DIAPHRAGM PUMP FOR AIR/GAS APPLICATION



Attributes

100% Oil-free
Excellent gas sealing / Contamination free
Optimal flow to size ratio
Low power consumption and noise level
Quick and easy maintenance procedure

Applications

Aspiration (surgical, welding)
Small portable equipment
Environmental sampling
Laboratory analysis
Laser cutters
Pick and place, transport
Vacuum-therapy

Performance Data

Maximum Flow	16 l/min
Maximum Vacuum	-747 mbar
Maximum Pressure	1000 mbar
Maximum vacuum Start up	-300 mbar
Maximum pressure Start up	300 mbar

Motor Data

Motor Type	DC Brushed	
Voltage	12 Vdc	24 Vdc
Maximum current	3.20 A	1.50 A
IP	50	
Insulation Class	E	
Electrical Connection	2 wire length 290 mm	

Additional Data

Average Noise	60 dB
Weight	706 g

Dimensions in mm

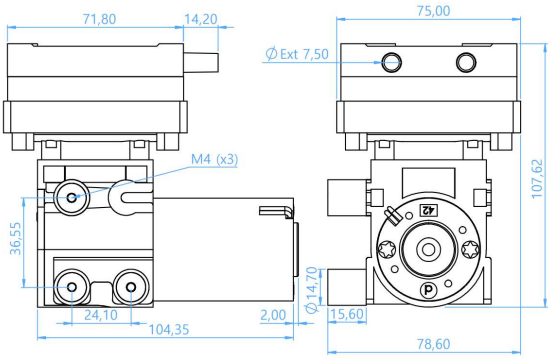

Available Material Options

Head	PPS
Diaphragm	EPDM (alternatives on request)
Valve	FKM (alternatives on request)
O-Ring	VMQ (alternatives on request)

Service kits

RUBBER KIT SR10	905.01

Vacuum / Flow characteristic

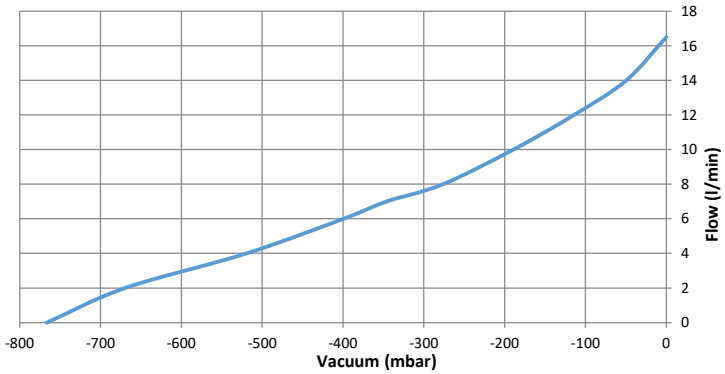

Pressure / Flow characteristic

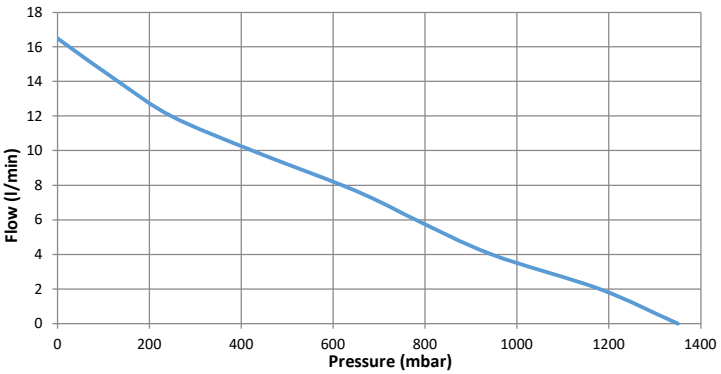

www.electroad.es

HEADQUARTERS
Castellví de Rosanes factories 1 & 2
La Pedrosa Industrial Park
08783 Masquefa; Barcelona; Spain
Tel: +34 937 728 529
Fax: +35 937 728 591
Email: comercial@electroad.es

ITALY SALES OFFICE
Via Giacomo Manzù 25
24122 Bergamo; Italy
Tel: +39 389 445 8471
Tel: +39 320 225 0058
Email: fdonado@ead-pumps.com
Email: sdeleonardis@ead-pumps.com

Your **success** is our satisfaction

Solutions for a **smart world**

Electro A.D., S.L. as a manufacturer does not guarantee or assume any obligation related to the data contained on this document and remarks that it could slightly differ between different products.
Electro A.D., S.L. keeps the right to modify any part or group of parts manufactured without notice in order to improve the product.
SR10 BD Gas Datasheet rev.1 – All rights reserved.