NEO BL

DIAPHRAGM PUMP FOR LIQUID APPLICATION



Attributes

100% Oil-free
Excellent gas sealing / Contamination free
Excellent flow to size ratio
Low power consumption and noise level
Quick and easy maintenance procedure
Exceptional motor lifetime
Pump Re-Start at maximum levels

Applications

Aspiration (surgical, welding)
Small portable equipment
Reprographics / Printing
Environmental sampling
Laboratory analysis
Dosing

Performance Data

Maximum Flow (gas)	1.8 l/min
Maximum Flow (liquid)	300 ml/min
Maximum Vacuum (gas)	-307 mbar
Maximum Pressure (gas)	300 mbar
Maximum Pressure (liquid)	12 mH_2O
Maximum pressure Start up	-307 mbar
Maximum pressure Start up	300 mbar

Motor Data

Motor Type	DC Brushless	
Voltage	12 Vdc	24 Vdc
Maximum current (gas)	0.35 A	0.20 A
IP	30	
Insulation Class	F	
Electrical Connection	2 wire length 220 mm [1]	

[1] Available 4 wire version w/ speed control and speed measurement

Additional Data

Average Noise	57 dB
Weight	264 g

Dimensions in mm

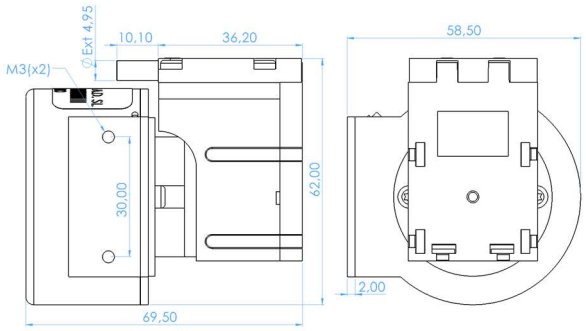

Available Material Options

Head	PPS
Diaphragm	FKM (alternatives on request)
Valve	FKM (alternatives on request)
O-Ring	EPDM (alternatives on request)

Service kits

RUBBER KIT NEO L	900.74

Pressure / Flow characteristic (liquid)

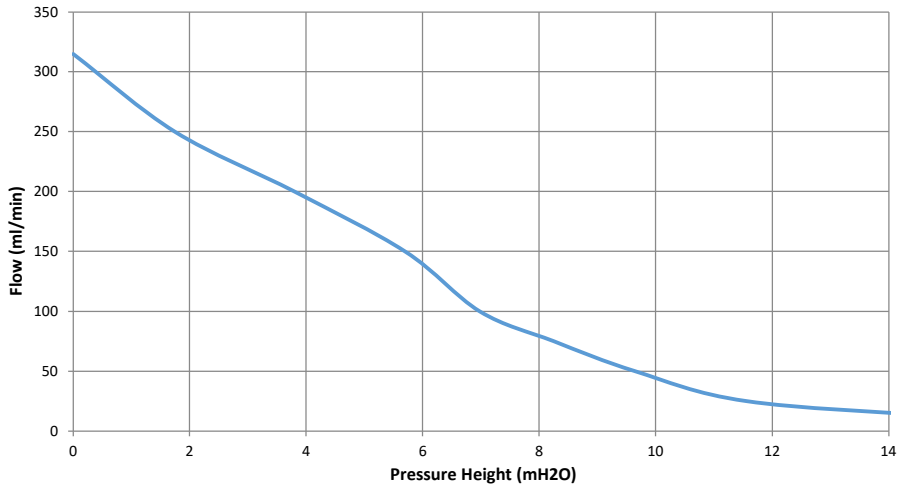

www.electroad.es

HEADQUARTERS
Castellví de Rosanes factories 1 & 2
La Pedrosa Industrial Park
08783 Masquefa; Barcelona; Spain
Tel: +34 937 728 529
Fax: +35 937 728 591
Email: comercial@electroad.es

ITALY SALES OFFICE
Via Giacomo Manzù 25
24122 Bergamo; Italy
Tel: +39 389 445 8471
Tel: +39 320 225 0058
Email: fdonado@ead-pumps.com
Email: sdeleonardis@ead-pumps.com

Your **success** is our satisfaction

Solutions for a **smart world**

Electro A.D., S.L. as a manufacturer does not guarantee or assume any obligation related to the data contained on this document and remarks that it could slightly differ between different products.
Electro A.D., S.L. keeps the right to modify any part or group of parts manufactured without notice in order to improve the product.