H10

DIAPHRAGM PUMP FOR AIR/GAS APPLICATION



Attributes	Applications
100% Oil-free	Aspiration (surgical, welding)
Excellent gas sealing / Contamination free	Scenting
Long reliable service life	Environmental sampling
Low power consumption and noise level	Laboratory analysis
Quick and easy maintenance procedure	Laser cutters
Exceptional motor lifetime	Pick and place, transport
Excellent flow/size ratio	Vacuum-therapy

Performance Data

Maximum Flow	16 l/min (+0,5 l/min @60Hz)
Maximum Vacuum	-760 mbar
Maximum Pressure	1400 mbar
Maximum vacuum Start up	ATM
Maximum pressure Start up	ATM

Motor Data

Motor Type	AC shaded pole	
Voltage	230 Vac 50Hz	120 Vac 60 Hz
Maximum current	0,7 A	1,3 A
IP	00	
Insulation Class	B (120°C Th. Protection)	
Electrical Connection	Male 6.3 x 0.8mm tab (L+N)	

Dimensions in mm

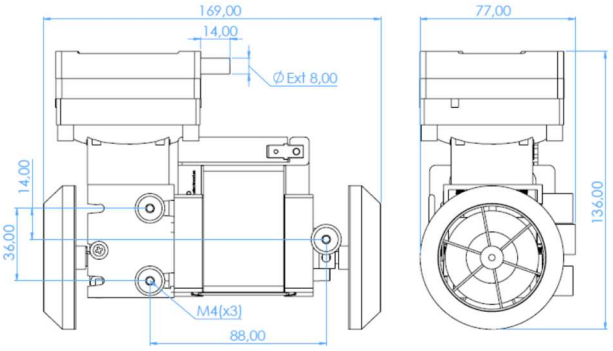

Additional Data

Average Noise	56 dB
Weight	1770 g

Available Material Options

Head	PPS (alternatives on request)
Diaphragm	EPDM (alternatives on request)
Valve	FKM (alternatives on request)
O-Ring	VMQ (alternatives on request)

Service kits

Ask for availability	N/D

Vacuum / Flow characteristic [1]

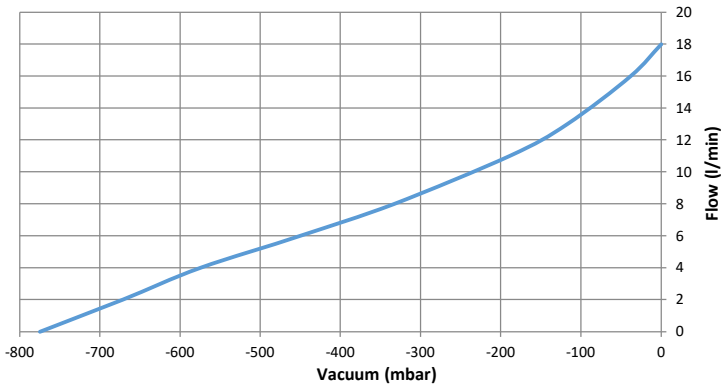

Pressure / Flow characteristic [1]

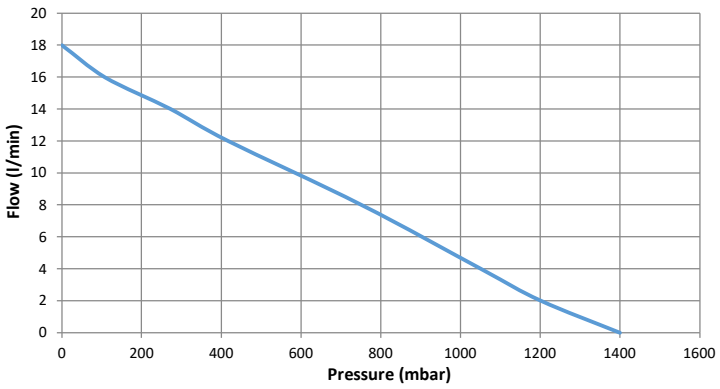

[1] Characteristics shown for frequency (f) at 50Hz. At f=60Hz starting flow increases +0,5 l/min.

www.electroad.es

HEADQUARTERS
Castellví de Rosanes factories 1 & 2
La Pedrosa Industrial Park
08783 Masquefa; Barcelona; Spain
Tel: +34 937 728 529
Fax: +35 937 728 591
Email: comercial@electroad.es

ITALY SALES OFFICE
Via Giacomo Manzù 25
24122 Bergamo; Italy
Tel: +39 389 445 8471
Tel: +39 320 225 0058
Email: fdonado@ead-pumps.com
Email: sdeleonardis@ead-pumps.com

Your **success** is our satisfaction

Solutions for a **smart world**

Electro A.D., S.L. as a manufacturer does not guarantee or assume any obligation related to the data contained on this document and remarks that it could slightly differ between different products.
Electro A.D., S.L. keeps the right to modify any part or group of parts manufactured without notice in order to improve the product.