BOXER E30

DIAPHRAGM PUMP FOR AIR/GAS APPLICATION



Attributes	Applications
High performance standards	Aspiration (surgical, welding)
100% Oil-free	High-capacity autoclaves
Ultra-High flow rate for quicker operation	Environmental sampling
Excellent gas sealing / Contamination free	Laboratory analysis
Long reliable service life	Laser cutters
Low power consumption and noise level	Pick and place, transport
Quick and easy maintenance procedure	Vacuum-therapy
Possibility to handle separate gases per head	

Performance Data @50Hz (single head)

Maximum Flow	48 l/ min (+4 l/min @60Hz)
Maximum Vacuum	-960 mbar
Maximum Pressure	1000 mbar
Maximum vacuum Start up	-300 mbar
Maximum pressure Start up	100 mbar

Motor Data

Motor Type	Permanent split capacitor	
Voltage	230 Vac 50Hz	120 Vac 60Hz
Maximum current	1.60 A	3.00 A
IP	20	
Insulation Class	F (150°C Th. Protection)	
Electrical Connection	Male 6.3 x 0.8mm tab (L+N+PE)	

Additional Data

Average Noise	60 dB
Weight	5510 g

Dimensions in mm

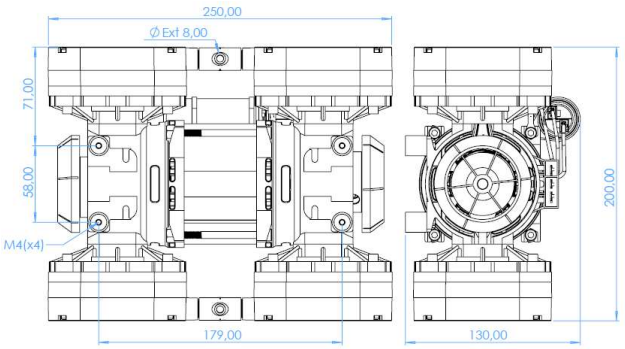

Available Material Options

Head	PPS
Diaphragm	EPDM (alternatives on request)
Valve	FKM (alternatives on request)
O-Ring	EPDM/FKM (alternatives on request)

Service kits

FULL RUBBER & FELT	900.66
BASIC RUBBER & FELT	900.67
CAPACITOR 7µF FAST KIT	900.93

Vacuum / Flow characteristic [1]

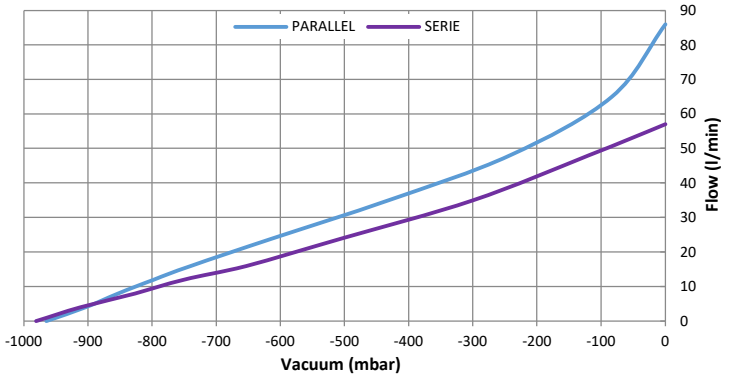

Pressure / Flow characteristic [1]

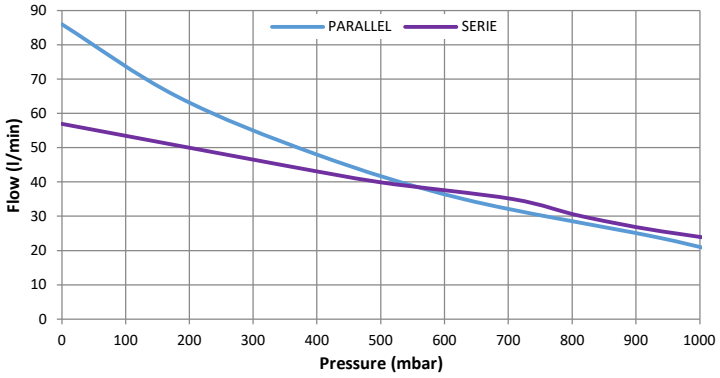

[1] Characteristics shown for frequency (f) at 50Hz. At f=60Hz starting flow increases +4 l/min.

www.electroad.es

HEADQUARTERS
Castellví de Rosanes factories 1 & 2
La Pedrosa Industrial Park
08783 Masquefa; Barcelona; Spain
Tel: +34 937 728 529
Fax: +35 937 728 591
Email: comercial@electroad.es

ITALY SALES OFFICE
Via Giacomo Manzù 25
24122 Bergamo; Italy
Tel: +39 389 445 8471
Tel: +39 320 225 0058
Email: fdonado@ead-pumps.com
Email: sdeleonardis@ead-pumps.com

Your **success** is our satisfaction

Solutions for a **smart world**

Electro A.D., S.L.U. as a manufacturer does not guarantee or assume any obligation related to the data contained on this document and remarks that it could slightly differ between different products.
Electro A.D., S.L.U. keeps the right to modify any part or group of parts manufactured without notice in order to improve the product.